TVD-CB6

TruVision cup base (5 inch) for S6 motorized turret cameras. Use with TVD-SNB, TVD-PPB, TVD-CBW.

Overview

The TVD-CB6 cup base can be used on brackets TVD-SNB, TVD-PPB and TVD-CBW



Details

- Compatible with camera brackets TVD-SNB, TVD-PPB, TVD-CBW
- For use with S6 motorized turret cameras TVT-5608, TVT-5609, TVT-5610, TVT-5611

TVD-CB6

TruVision cup base (5 inch) for S6 motorized turret cameras. Use with TVD-SNB, TVD-PPB, TVD-CBW.

Technical specifications

General

Bracket type	Câmara
Support type	TruVision mini kupler
Bracket mounting part	Base do copo
Mount type	Vægmontering

Physical

Physical dimensions	Ø 136 mm Ø 5.35 in.
Colour	Cinzento (Pantone 428c)
Material	Aluminium

Environmental

Environment	Indendør, Udendørs

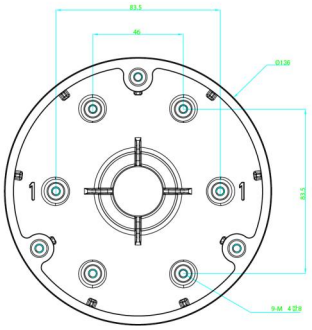

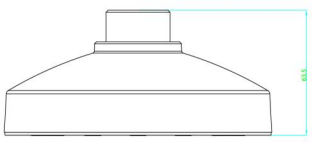

As a company of innovation, Kidde Global Solutions reserves the right to change product specifications without notice. For the latest product specifications, visit firesecurityproducts.com online or contact your sales representative.

Last updated on 7 September 2026 - 13:58