TVD-6113

Truvision HD-TVI Analog Dome Camera, Smart Hybrid light, 2MP, 2.8-12mm Lens, 60m IR and White light, 12VDC, IP67, IK10

High-definition video over coax infrastructure

These advanced 2MP HD-TVI cameras deliver crisp, high-resolution video with 2MP (1920×1080) imaging, making them ideal for a wide range of surveillance applications. Designed to work seamlessly over legacy coaxial cabling, they offer a cost-effective upgrade path without the need for extensive infrastructure changes. Fully compatible with TruVision Hybrid DVRs and encoders, they integrate easily into both new and existing surveillance systems.

Superior imaging in all lighting conditions

Equipped with a large aperture, the cameras provide 24/7 full-color imaging, capturing vivid detail even in low-light environments. Smart-hybrid light technology enhances night surveillance with flexible lighting options—white or IR—that can be activated based on detected motion. With 130 dB true Wide Dynamic Range (WDR) and 3D Digital Noise Reduction (DNR), the cameras maintain clarity and contrast in challenging lighting, including strong backlight or low-light scenes.

Versatile design with built-in audio and rugged protection

The TVx-611x 2MP HD-TVI range includes both fixed lens models (2.8 mm and 3.6 mm) and motorized varifocal lens models (2.8 mm to 12 mm), available in dome and bullet form factors to suit various installation needs. The dome models feature the most powerful illumination with up to 60 meters of both white light and IR distance, ensuring excellent visibility in darkness. Built-in microphones enable high-quality audio over coax, and robust IP67 water/dust resistance combined with IK10 vandal protection ensures durability in demanding indoor or outdoor environments.



Details

- 2MP resolution
- Color images at night, with minimal environmental light or supported by built-in white light
- IR and white light range illumination up to 60 m
- HD-TVI technology for transmitting HD quality video over existing coax cable
- True day/night functionality combined with Smart IR and white light function for capturing quality images in various lighting scenarios
- IP67 environmental rating
- True Wide Dynamic Range
- OSD functionality via TruVision up the coax control

TVD-6113

Truvision HD-TVI Analog Dome Camera, Smart Hybrid light, 2MP, 2.8-12mm Lens, 60m IR and White light, 12VDC, IP67, IK10

Technical specifications

General

Technology	HD-TVI analog
Video standard	NTSC, PAL
Privacy masking	4 programmable privacy masks
Video output	HD-TVI

Camera

Max. resolution	2 MPX
Sensor scan	Progressiv
Sensor type	CMOS
Effective pixels (H x V)	1920 x 1080
Shutter time	PAL: 1/25 s to 1/50,000; NTSC: PAL: 1/30 s to 1/50,000

Lighting performance

WDR type	Echt-WDR
WDR	130 dB
White light	Yes
White light range	Up to 60 m
Digital noise reduction	3D DNR
Day/night	Echt Tag / Nacht
Motorized IR cut filter	Yes
Color sensitivity	0.0005 Lux @ (F1.28, AGC ON), 0 Lux with white light
Infrared (IR)	Yes
IR range	Up to 60 m

Lens

Lens type	Varifokal motorisiert
Focal length	2.8 to 12 mm, Horizontal FoV: 106 to 32°, vertical FoV: 56 to 18°, diagonal FoV: 127 to 37°
f-stop	F1.28
Auto focus	Yes
Motorized zoom	Yes

Audio

Audio in	Built-in mic.

Electrical

Operating voltage	12 VDC
Power consumption	7.4 W max.

Physical

Physical dimensions	Ø 121 x 97 mm Ø 4.78 x 3.84 in.
Net weight	Approx. 570 g Approx. 1.26 lb.
Colour	Grau (Pantone 428c)
Material	Aluminium
Form Factor	Dome

Environmental

Vandal proof	Yes
Impact rating	IK10
Environment	Drinnen, Draussen
Operating temperature	-40 to +60°C -40 to 140 °F
Relative humidity	<90%, noncondensing
IP rating	IP67

Regulatory

Compliancy	CE, REACH, RoHS, WEEE

Compatible TruVision Recorders/Encoders

TVR17	
TVR12HD	(Record max. 12 fps)
TVR46HD	
TVR45HD	
TVR15HD	
TVE-120/420/820/1620	

Compatible products

Category	Reference	Description
Brackets & Mounts	TVD-CBW	TruVision wall mount bracket compatible with TruVision Cup Bases TVx-CBx
Brackets & Mounts	TVD-PPB	TruVision Dome Pendant Ceiling mount bracket for TVD-CBx, TVF-CBM
Brackets & Mounts	TVW-BB1	TruVision Wedge camera back box (used with S6 series of wedge cameras)

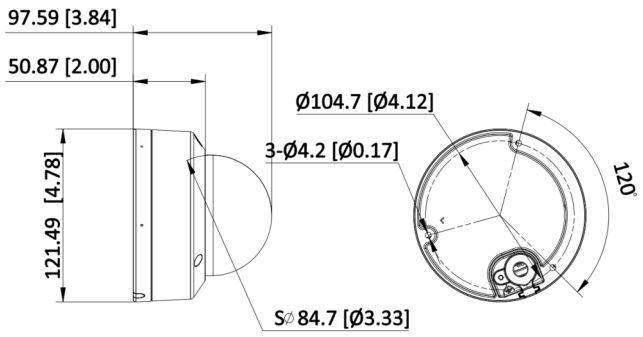

As a company of innovation, Kidde Global Solutions reserves the right to change product specifications without notice. For the latest product specifications, visit firesecurityproducts.com online or contact your sales representative.

Last updated on 20 February 2026 - 9:59