DC104

Contacto Magnético Balanceado Montagem Superfície - GAP: 1.5cm - 3.1cm, terminais parafuso

Easy Installation

The DC102-series are ideal for residential and commercial applications where terminal connections are preferred. The unit features positive clamping terminals with anti-rotation lugs and captured screws with combination heads. These features allow for easy, quick installations.

Comprehensive Range

The range includes wide gap, SPDT and biased versions for higher security. This makes it one of the most popular contacts available in the industry today.

Durability and dependability

These high performance magnetic contacts have been designed to facilitate installation and ensure durability and dependability. Most are conservatively rated at 10,000,000 cycles, guaranteeing a long life. Every reed connection is hand soldered and each magnetic contact is tested before they leave the factory.

High quality components and materials

Reed legs are plated with rhodium or ruthenium, and hermetically sealed in dry nitrogen. This offers superior protection against sticking and provides a moisture free environment therefore preventing corrosion.



Detalhes

- Ideal for residential and commercial
- Convenient surface mounting
- Versions with built-in resistors available

DC104

Contacto Magnético Balanceado Montagem Superfície - GAP: 1.5cm - 3.1cm, terminais parafuso

Especificações técnicas

General

Application type	Oppervlaktemontage
Contact type	CO

Wired/wireless

Wired-wireless	Verdrahtet

Physical

Colour	Weiß

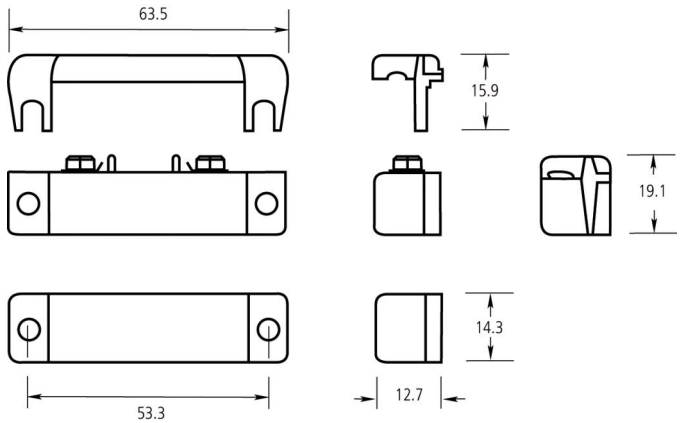

Como empresa de inovação, a Kidde Global Solutions reserva o direito de alterar as especificações do produto sem aviso prévio. Para obter informações sobre as especificações mais recentes do produto, visite pt.firesecurityproducts.com online ou contate o departamento comercial.

Last updated on 12 November 2026 - 18:57