S40-2SLC-10

SFP+ Port 10BaseG-LR SFP+ Module - 2 Fiber - 10Km - Single-Mode - 1310nm (0~70?)

Overview

The KGS Fire & Security transceiver module is specifically designed to accommodate high-performance optical fiber, including integrated duplex data link over single mode.

The S40-2SLC-10 transceiver module features hot-plug capability for easy installation without interrupting host equipment operating online. The SFP+ transceiver module can install into KGS Fire & Security switch products with 10GBase-LR SFP+interface.



Dettagli

- Flexible SFP+ package
- Complies with the IEEE 802.3ae 10 Gigabit Ethernet Standard
- Class 1 laser safety standard IEC 60825 compliant
- LC duplex receptacle
- Low power dissipation
- Plug-and-play capability for easy installation
- Hot Pluggable
- 0ºC to +70ºC operation temperature
- TTL signal detect indicator
- Single power supply 3.3V

S40-2SLC-10

SFP+ Port 10BaseG-LR SFP+ Module - 2 Fiber - 10Km - Single-Mode - 1310nm (0~70?)

Specifiche tecniche

General

Categoria	SFP
Tipo porta	Enkelt Tilstand
No. di fibre	2
Velocità porta	10G
Lunghezza d'onda	1310 nm

Regulatory

Conformità	CE, FCC

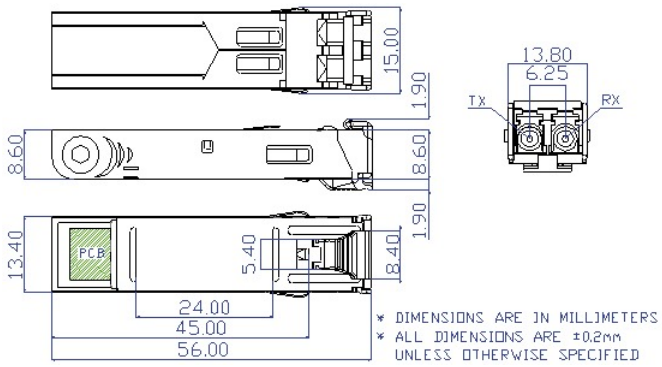

In quanto azienda in continua innovazione, Kidde Global Solutions si riserva il diritto di modificare le specifiche del prodotto senza preavviso. Per avere informazioni sempre aggiornate, visita it.firesecurityproducts.com online o contatta il tuo riferimento commerciale.

Last updated on 12 November 2026 - 20:20