N-MC-S-R

ActivSense™ Accessory - Intelligent Manual Call Point Trim Skirt - Red

General

The innovative ActivSense range of enhanced intelligent addressable devices offers advanced features for reliability and peace of mind. Coupled with patented features for ease of installation and maintenance of both new and legacy fire detection systems, it’s a perfect match for exceptional overall performance.

The N-MC-S-R is an ActivSense surface mount accessory for ActivSense manual call points. It offers the possibility to cover unsightly gaps between the wall and a recess mount manual call point for recess mount applications when the holes in the wall are not perfectly cut. With its matching red colour and same aesthetic design as the ActivSense manual call point, it finishes off any recess mount application beautifully.

Installation

The N-MC-S-R requires no special tools or additional parts for installation. It is simply placed between the manual call point front and the wall for most standard applications, and fir with the same screws that normally fits the manual call point to it's standard back box. If special mounting options are required with other fitment locations for other types of wall boxes, the trim skirt may be paired with a recess mount adapter allowing for fitment options for installations on most high quality European wall boxes.

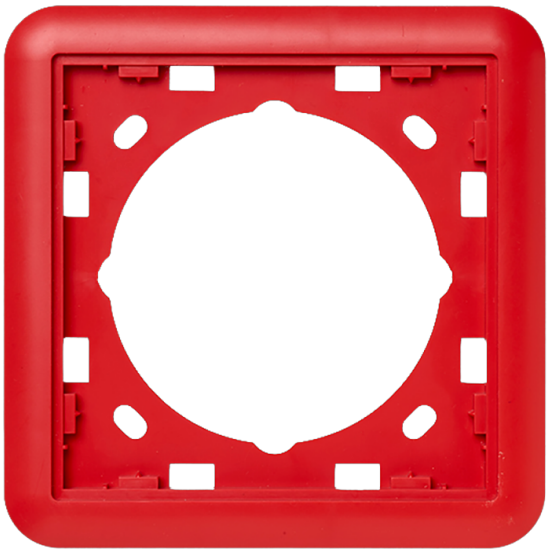

Détails

- Covers uneven cut holes in wall when recessed wall boxes are used
- Matches the colour and design of the manual call point allowing for an aesthetic, integrated look.
- East to fit with various mounting options for most European wall boxes.
- No additional installation parts required

N-MC-S-R

ActivSense™ Accessory - Intelligent Manual Call Point Trim Skirt - Red

Spécifications techniques

General

Compatibility	ActivSense manual call points

Physical

Physical dimensions	108.1 x 108.1 x 8 mm ((L x W x D)
Colour	Rood (RAL 3028)
Mounting type	Wandmontage
Material (body)	Noryl SE100 (zelfdovend)

Environmental

Vandal proof	No
Environment	Drinnen

Regulatory

Compliancy	CE, REACH, RoHS 2, WEEE

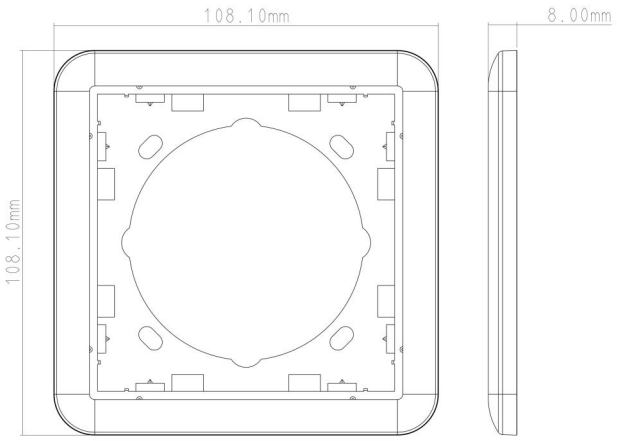

KIDDE COMMERCIAL

En tant que société d'innovation, Kidde Global Solutions se réserve le droit de modifier les spécifications des produits sans préavis. Pour les dernières spécifications du produit, visitez le site web be.firesecurityproducts.com ou contactez votre représentant commercial.

Last updated on 12 November 2026 - 18:57