# DC109

## Industrial door contact

### Overhead door magnetic contact

The DC108 series overhead door magnetic contact is for use in the rigorous environments of commercial and industrial installations. The floor mount units are constructed with a low profile heavy cast aluminium housing. The reed switch assembly is fully encased in an exclusive polyurethane potting material to prevent damage due to moisture or humidity.

### Easy installation

A wide operating gap distance of up to 7.5 cm makes installation easy and helps prevent false alarms caused by door movement or damaged and loose fitting doors.




### Details

- Miniature, low-profile design
- Stainless steel armoured cable for added security, reliability
- Wide working gap for overhead doors
- Small size less likely to be damaged by forklifts
- Tamper loop provided

# DC109
## Industrial door contact

## Technical specifications

### General

| | |
|---|---|
| Application type | Oppervlaktemontage |
| Contact type | NC |
| Connectivity | 4 wires, 2 m |

### Wired/wireless

| | |
|---|---|
| Wired-wireless | Kablede |
| Operating gap | 75 mm (max.) |

### Physical

| | |
|---|---|
| Dimensions magnet | 89 x 38 x 38 mm |
| Dimensions contact / sensor | 89 x 38 x 38 mm |
| Material | Aluminium |

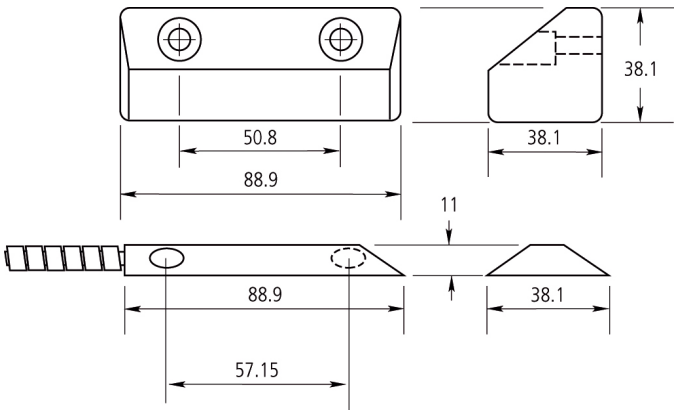


As a company of innovation, Kidde Global Solutions reserves the right to change product specifications without notice. For the latest product specifications, visit firesecurityproducts.com online or contact your sales representative.

Last updated on 13 August 2026 - 11:05