KE-ASA-AUXW

Intelligent addressable notification accessory - deep base (white)

General

The innovative Excellence range of intelligent addressable devices offers advanced features for reliability and peace of mind. Coupled with features for ease of installation and maintenance on new fire detection systems, it's a perfect match for exceptional overall performance.

The KE-DBA-AUXW is an Excellence series, surface mount base accessory. It allows cabling to be installed by running standard electrical conduit directly into the base, leaving no exposed cabling.



Preparation

The standard rear cable entry into the base is available with the same wide opening dimensions as the standard base with ample room for cables. In addition, four entry points are provided on the wall of the fixture to accommodate side entry, spaced at 90° around the base to allow entry and exit in all directions.

Installation

The conduit entry points are conveniently supplied with breakouts and drill locations to facilitate either installation method.

Keyhole screw fixing locations adds to the ease of installation, with built-in flexibility features to allow for mounting on uneven surface without distorting of the base.

The standard Excellence series detector base fits snugly inside the fixture, completing the installation with the same feature set as for standard surface mount installation, including address tag mounting ability in two locations, head locking to avoid unauthorised detector removal, and device orientation features for quick, easy and secure detector placement.

Details

- Large rear cable entry with ample space for cables
- Side conduit entry protects cables from damage
- Drill location and breakout support for conduit entry
- Support for uneven mounting surfaces with stress relief
- Installation fixture with first fix screw option reduces installation time and effort
- Dual address tag locations avoids alignment to make tags visible
- Supports standard Excellence series bases without feature loss, all base features remain usable
- Supports access to the selectable detector locking mechanism that protects against unauthorised detector removal

KE-ASA-AUXW

Intelligent addressable notification accessory - deep base (white)

Technical specifications

General

Compatibility	Excellence series bases

Physical

Physical dimensions	111 x 47 mm (Ø x H)
Net weight	165 g
Colour	Weiß (RAL 9016)
Mounting type	Deckenmontage
Cable entries	5 (1 off rear, 4 off 25 mm (Ø) Conduit)
Material (body)	Geformtes ABS

Environmental

Vandal proof	No
Operating temperature	-30 to +85°C
Relative humidity	20 to 95% noncondensing
Environment	Drinnen

Regulatory

Compliancy	CE, REACH, RoHS 3, WEEE
Certification	CE

Compatible products

Category	Reference	Description
Detection device	KE-DB3010W	Excellence series intelligent device accessory - standard base
Detection device	KE-DBA-TAGW	Intelligent addressable base accessory - address tag (white), supplied in packs of 10

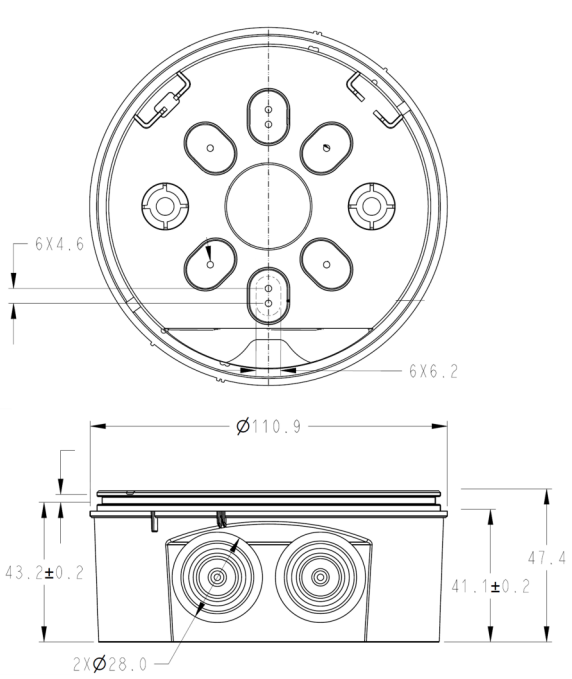

KIDDE COMMERCIAL

As a company of innovation, Kidde Global Solutions reserves the right to change product specifications without notice. For the latest product specifications, visit firesecurityproducts.com online or contact your sales representative.

Last updated on 25 June 2026 - 8:45